SUBMITTAL DATA:

Qty	Platform Model No.	Cable Length	Display Increments

Solo Indicator Model No. _____

4-20mA Per Channel _____

Relays Per Channel _____ DRY / SOLID STATE

Other Options: _____

_____

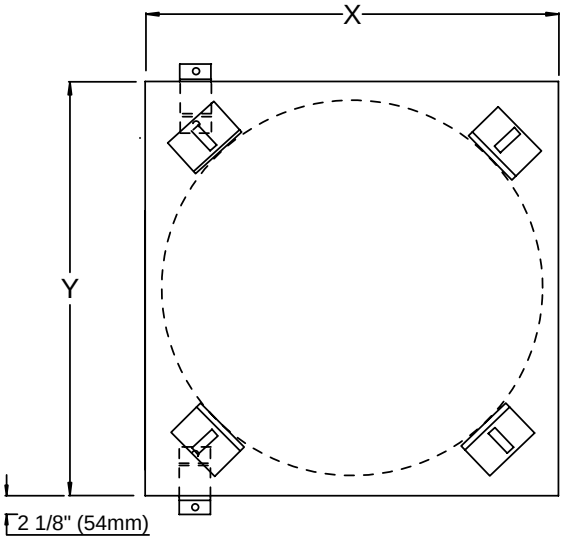

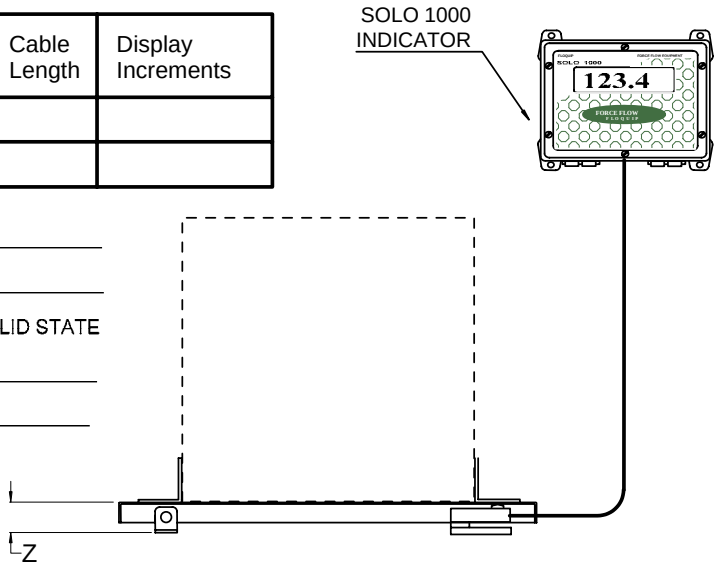

IMPORTANT !
For accurate measurement, adjust clips so that tank is centered on platform.

MODEL NUMBERS (for Load Cell & Platform)

Model No.	(Capacity)	Metric	(Capacity)	X	Y	Z	
30-DR10LP	(1000 lb)	30-DR5KLP	(500 kg)	30"	x 30"	x 3.25"	(762mm sq)
30-DR20LP	(2000 lb)	30-DR10KLP	(1000 kg)	"	"	"	"
40-DR30LP	(3000 lb)	40-DR15KLP	(1500 kg)	40"	x 40"	x 3.25"	(1016mm sq)
40-DR40LP	(4000 lb)	40-DR20KLP	(2000 kg)	"	"	"	"
50-DR50LP	(5000 lb)	50-DR25KLP	(2500 kg)	50"	x 50"	x 3.25"	(1270mm sq)
50-DR60LP	(6000 lb)	50-DR30KLP	(3000 kg)	"	"	"	"
60-DR80LP	(8000 lb)	60-DR50KLP	(5000 kg)	60"	x 60"	x 3.25"	(1524mm sq)
60-DR100LP	(10,000 lb)	60-DR60KLP	(6000 kg)	"	"	"	"
72-DR150LP	(15,000 lb)	72-DR80KLP	(8000 kg)	72"	x 72"	x 3.50"	(1829mm sq)
72-DR200LP	(20,000 lb)	72-DR100KLP	(10,000 kg)	"	"	"	"

Other Models: (For stainless steel platform add "S" to end of model number.)

.

_____ _____ _____

_____ _____ _____

MODEL NUMBER (for SOLO 1000 Indicator)

SR-1000-1 1-Channel SOLO 1000 Indicator
SR-1000-2 2-Channel SOLO 1000 Indicator

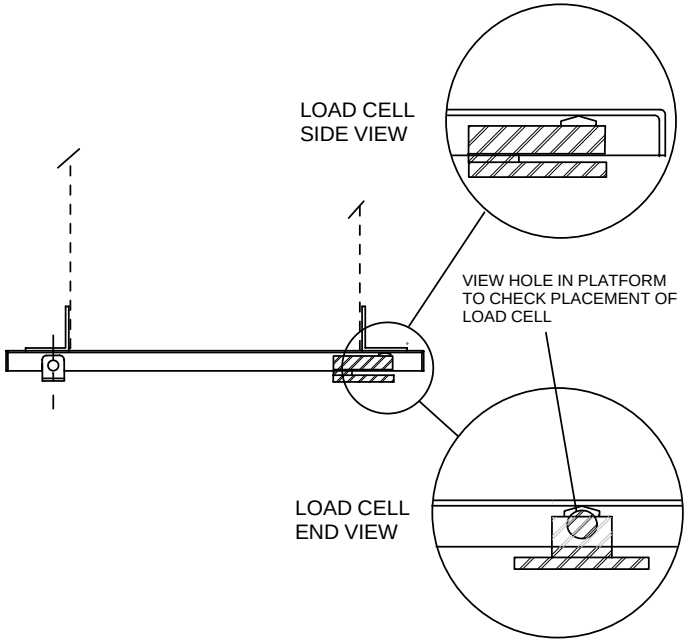

S.1.104

FORCE FLOW

1150-D Burnett Ave, Concord, CA 94520 USA
1-800-893-6723 US & Canada, Fax: 925-686-6713
www.forceflow.com / info@forceflow.com

ELECTRONIC LOW PROFILE CHEM-SCALE with SOLO 1000 INDICATOR

Drawn by:	SLP
Date:	09/18/95
Revised:	09/29/99
Scale:	NONE

Drawing Number 30288

File: T4\O&M\CHEMSOLO\CHEMSOLO.tcw (D12.pdf) (WEB: CHEMSOLO.pdf) 11/2005
EMAIL/DRAWINGS/CHEM/_SOLO CHEM & CHEMSOLO.pdf