MODEL NUMBERS (for Frame & Load Cell)
DR80 (8000 lbs)
DR40K (4000 kgs)

MODEL NUMBER (for SOLO 1000 Indicator)
SR-1000-1 1-Channel
SR-1000-2 2-Channel

_____ Model Number of Indicator (Lbs or Kgs _____)

_____ Model Number of Frame

_____ Feet of Cable per Scale (20' Standard)

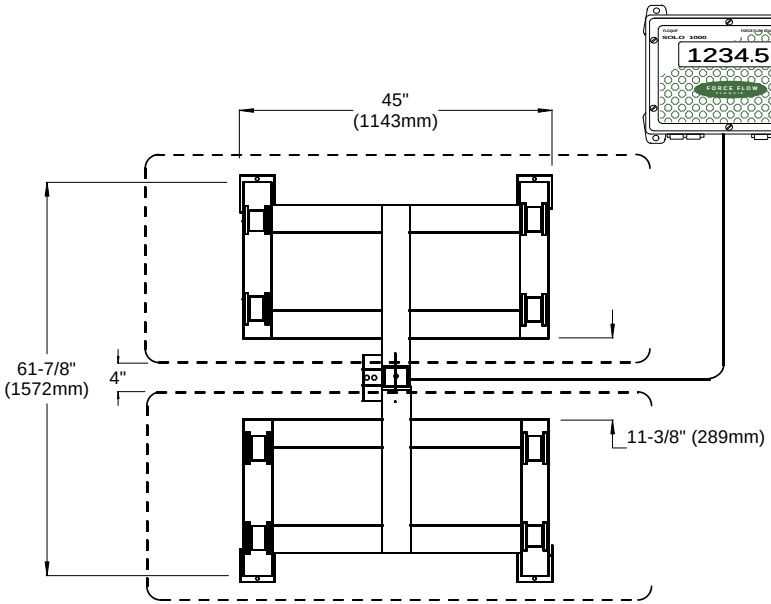

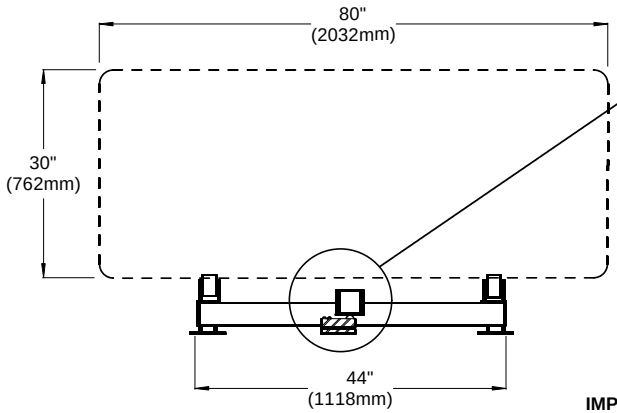

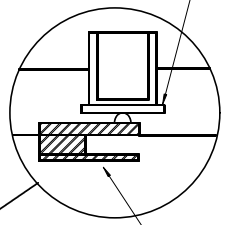

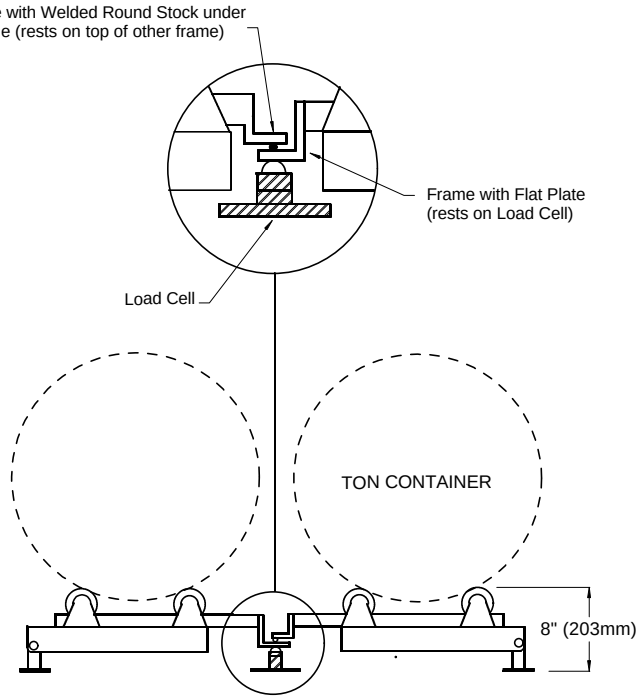

IMPORTANT: Position Load Cell so that it is parallel with the scale frames. Read the installation section carefully for proper placement of the frames.

S.1.121

FORCE FLOW
FLOQUIP

1150-D Burnett Ave, Concord, CA 94520 USA
1-800-893-6723 US & Canada, Fax: 925-686-6713
www.forceflow.com / info@forceflow.com

File: T4\O&M\TONSOLO\SOLODBL.tcw (S04.pdf) (WEB: TON2SOLO.pdf)

ELECTRONIC DUAL TANK SCALE
CHLOR-SCALE with SOLO 1000
(8000 lb. or 4000 kg. Capacity)

Drawn by:	**SLP**
Date:	**09/01/98**
Revised:	**01/21/97**
Scale:	**NONE**

Drawing Number
30279